SSP35-60K Engraving Electrospindle (ATC)

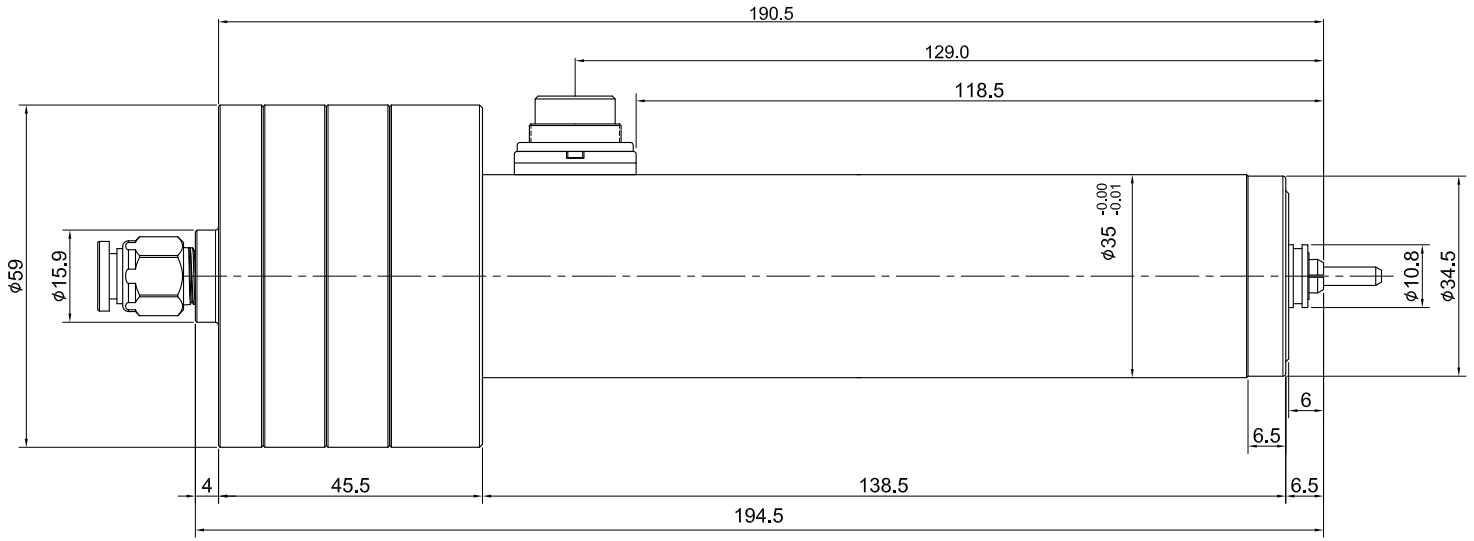

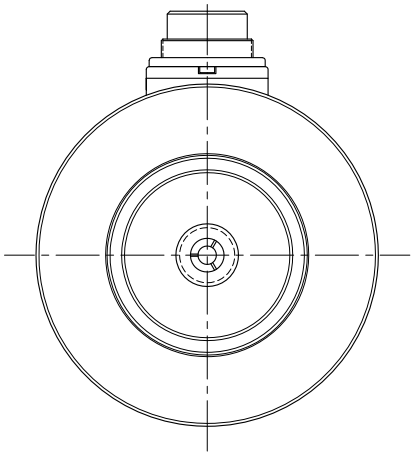

Max.speed	60000 rpm
Run-out	0.01 mm (Spindle cone) 0.03 mm (Collet)
Housing	Alloy Aluminum
Taper size	ϕ3.175 mm (collet)
Motor Power Peak Power	0.1 Kw (S1-100% . ate) 0.26 Kw (50000 rpm)
Motor Torque Peak Torque	1.7 Ncm 4.9 Ncm (50000 rpm)
Motor pole	2 P
Motor Voltage	200 V
Motor Rated Current	0.6 A
Motor Peak Current	1.4 A (50000 rpm)
Motor Protect	PTC 130°
Cooling system	Working environment temp. 25~28° C.

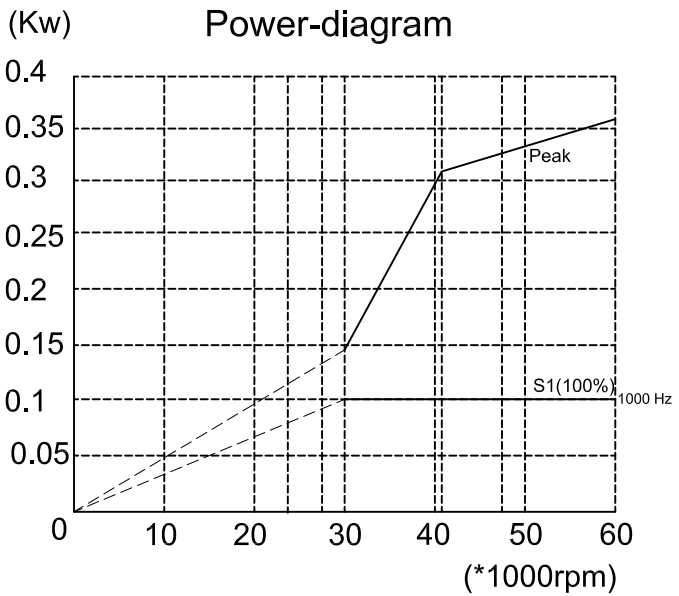

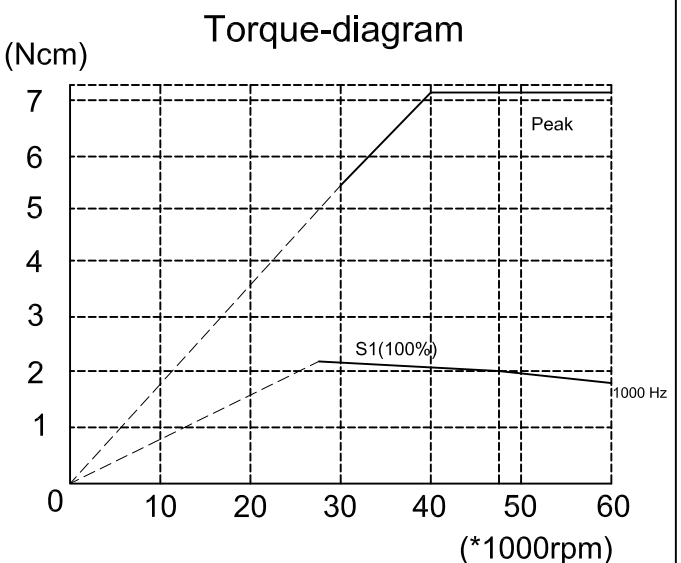

***The manufacturer has the power to change the performance and appearance dimensions. The change is made to the advanced method of the product.**